Torque motor RMI 062

Technical data: size RMIx062-xxxL-2D5S

Characteristics and nominal values:

The conditions for the following nominal values are

- DC bus voltage of 560 V (400 V_{AC})
- ambient temperature of 40 °C
- maximum winding temperature of 140 °C (In.CL.F)
- liquid cooling with water-antifreeze

Stack length L1	Unit	030L	060L	120L	240L
Torque constant k_m	Nm/A	←			0,301 →
Voltage constant k_e	Vs	←			0,246 →
Back emf U_{lpk}	$V_{@1000rpm}$	←			25,74 →
Terminal inductance L_{tt}	mH	0,613	0,292	0,142	0,007
Terminal resistance R_{tt}	Ω	0,125	0,043	0,017	0,071
Maximum power P_{max}	kW	39	81	166	336
Maximum torque M_{max}	Nm	19	38	77	155
Maximum current I_{max}	A	115	230	460	920
Thermal resistance R_{th}	K/W	0,131	0,109	0,089	0,080
Continuous stall torque M_0	Nm	13	25	46	80
Continuous stall current I_0	A	70	110	197	318
No-load speed n_0	rpm	←			21.758 →
Number of poles 2p	-	←			8 →
Rated torque M_n	Nm	10	20	34	57
Rated current I_n	A	42	80	131	212
Rated speed n_n	rpm	24.000	21.300	18.300	13.500
Motor inertia J	kgcm²	3,12	6,35	12,51	25
Motor mass frameless m	kg	2,4	4,8	9,6	19,2
Dynamic factor ώ	rad/s²	←			61.000 →

Dimensions of the frameless motor:

- with potted stator
- user manual available on request
- option: customized dimensions

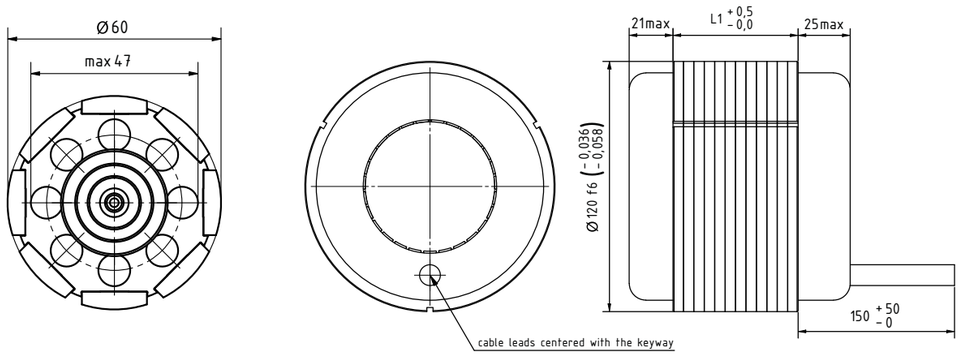

Motor characteristic: size RMIx062-xxxL-2D5S

Options of customization:

- voltage range from 5 – 750 V
- demand of speed, current and power
- stator frequency up to 2400 Hz
- temperature range -55 °C – +260 °C
- explosion proof increased safety
- vacuum 10^{-9} mbar, inert gas atmosphere
- radhard, dose 3 - 10 - 100 MGy-Si
- cooling: liquid, fan, air, oil
- certification on demand UL, Ex, CE
- motor with housing, encoder and brake

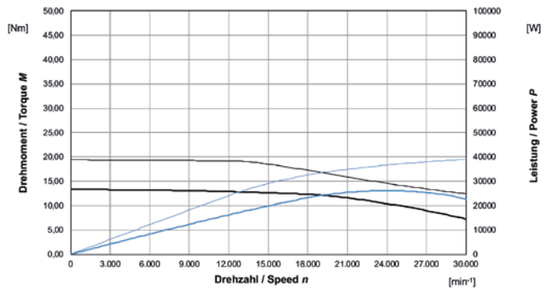

RMIF062-030L-2D5S

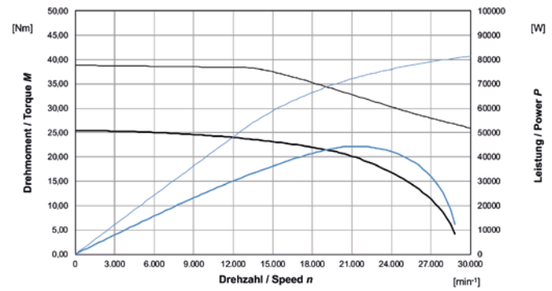

RMIF062-060L-2D5S

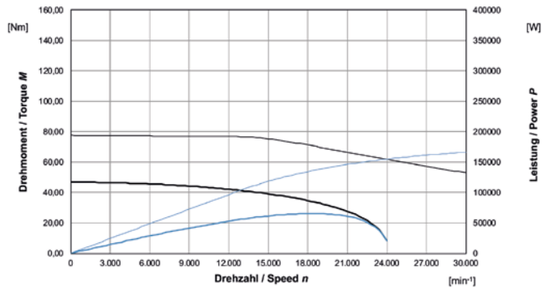

RMIF062-120L-2D5S

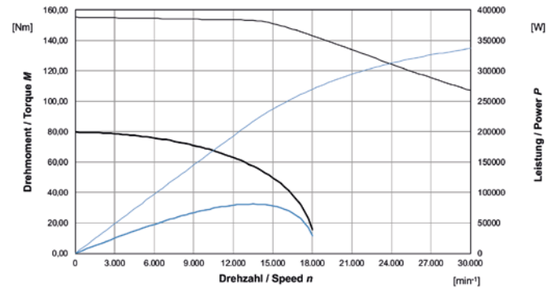

RMIF062-240L-2D5S

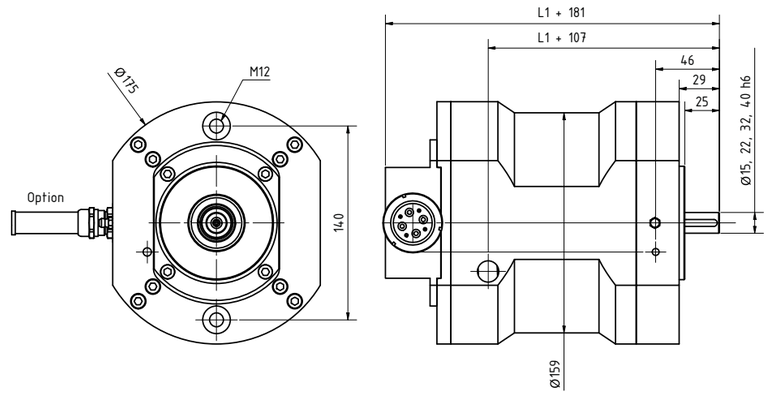

RMIx062-xxxL-2D5S motor with housing